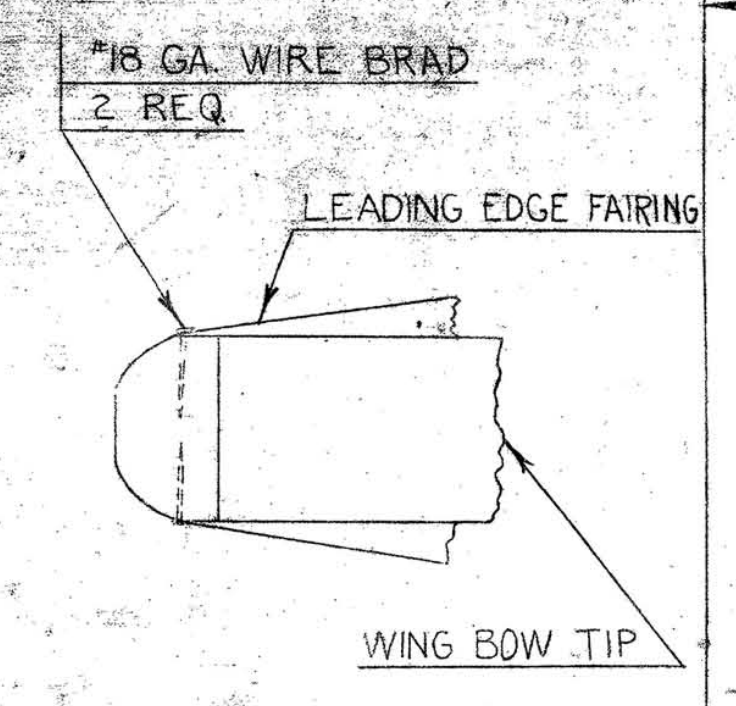
#18 GA. WIRE BRAD 2 REQ.
LEADING EDGE FAIRING
WING BOW TIP

FIG. 14 NAILING DETAIL FULL SIZE

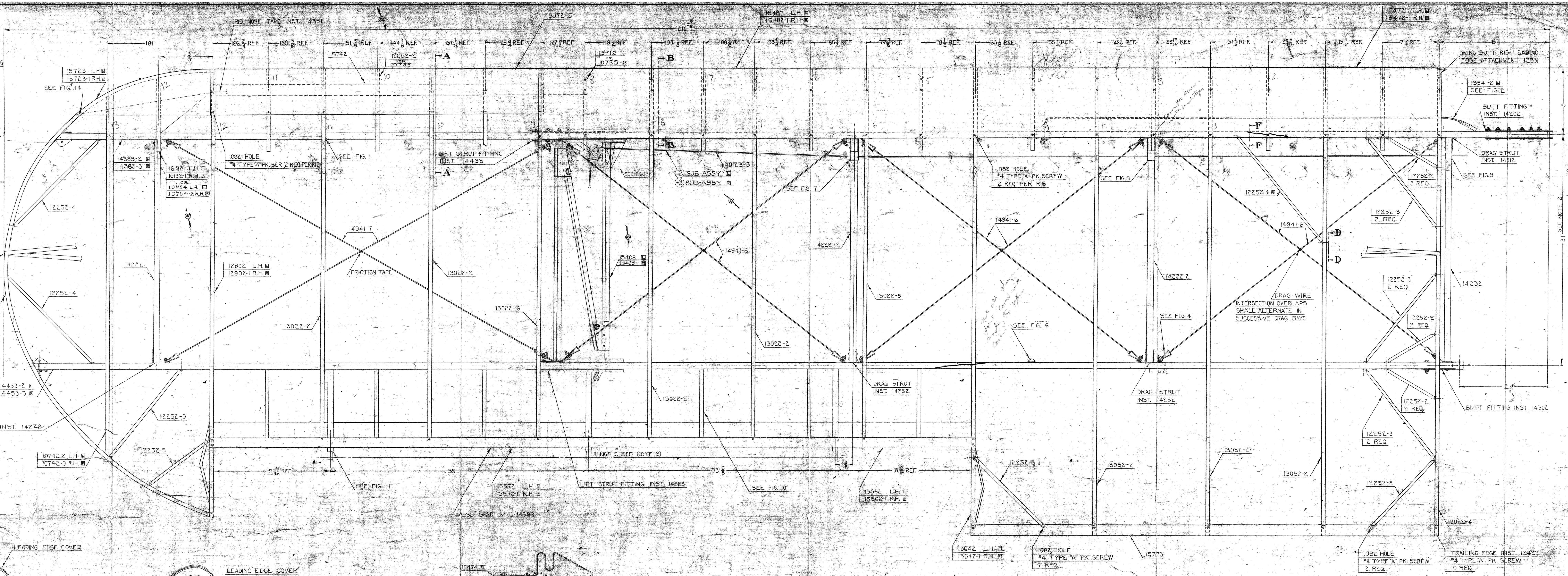
RIB NOSE TAPE INST. 14351
13072-5
15482 L.H. 15482-1 R.H.
15472 L.H. 15472-1 R.H.
210
181
15723 L.H. 15723-1 R.H.
SEE FIG. 14
15742
12662-2 OR 10755
13712 OR 10755-2
A
B
WING BUTT RIB - LEADING EDGE ATTACHMENT 12331
13541-2 SEE FIG. 2
BUTT FITTING INST. 14202
.082 HOLE #4 TYPE "A" PK. SCR. (2 REQ PER RIB)
SEE FIG. 1
LIFT STRUT FITTING INST. 14433
SEE FIG. 13
-2 SUB-ASSY.
-3 SUB-ASSY.
40123-3
F
.082 HOLE #4 TYPE "A" PK. SCREW 2 REQ. PER RIB
SEE FIG. 8
DRAG STRUT INST. 14312
SEE FIG. 9
14383-2 14383-3
16192-1 L.H. 16192-1 R.H. OR 10754 L.H. 10754-2 R.H.
12252-4
RIB CENTER TAPE INST. 12451
TIP BOW INST. 14323
14222
12902 L.H. 12902-1 R.H.
14941-7
FRICTION TAPE
13022-2
15403
14941-6
SEE FIG. 7
14222-2
13022-5
14941-6
12252-4
12252-2 2 REQ.
12252-3 2 REQ.
D
DRAG WIRE INTERSECTION OVERLAPS SHALL ALTERNATE IN SUCCESSIVE DRAG BAYS
SEE FIG. 6
SEE FIG. 4
12252-3 2 REQ.
12252-2 2 REQ.
14232
13022-6
13022-2
14453-2 14453-3
DRAG STRUT INST. 14242
12252-3
DRAG STRUT INST. 14252
DRAG STRUT INST. 14252
12252-2 2 REQ.
BUTT FITTING INST. 14302
12252-3 2 REQ.
10742-2 L.H. 10742-3 R.H.
12252-5
HINGE ℄ (SEE NOTE 3)
35
SEE FIG. 11
15572 L.H. 15572-1 R.H.
LIFT STRUT FITTING INST. 14283
SEE FIG. 10
15562 L.H. 15562-1 R.H.
FALSE SPAR INST. 14393
12252-8
13052-2
13052-2
13052-2
12252-8
13052-4
13042 L.H. 13042-1 R.H.
.082 HOLE #4 TYPE "A" PK. SCREW 2 REQ.
15773
.082 HOLE #4 TYPE "A" PK. SCREW 2 REQ.
TRAILING EDGE INST. 12422 #4 TYPE "A" PK. SCREW 10 REQ.
63
31 SEE NOTE 2
9

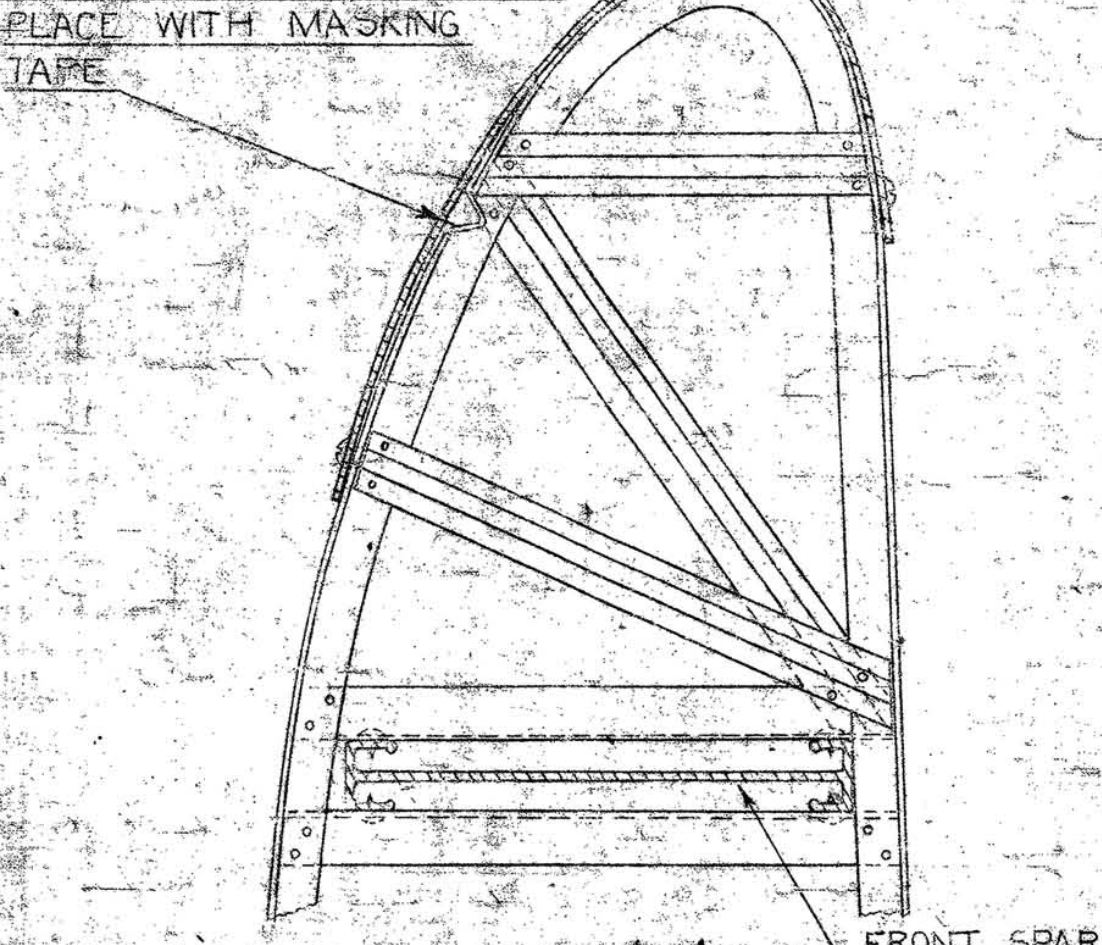
LEADING EDGE COVER
REINFORCEMENT LOCATED APPROX. OVER VERTICAL BRACE OF RIB AND TO BE HELD IN PLACE WITH MASKING TAPE
FRONT SPAR

SECTION A-A
6 IN. = 1 FT.

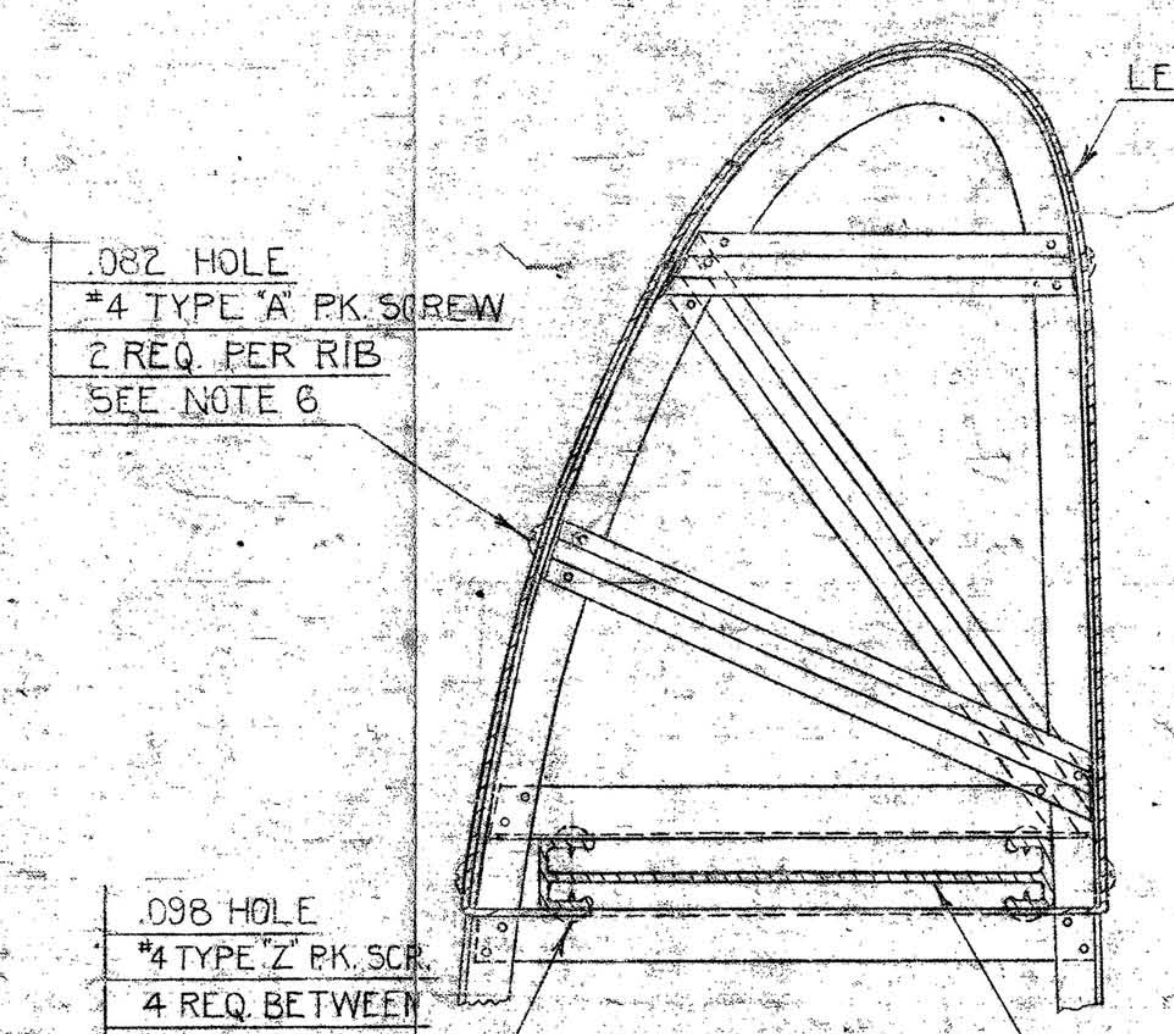
LEADING EDGE COVER
.082 HOLE #4 TYPE "A" PK. SCREW 2 REQ. PER RIB SEE NOTE 6
.098 HOLE #4 TYPE "Z" PK. SCR. 4 REQ. BETWEEN ADJACENT RIBS SPACED APPROX. 2 FROM EDGES OF CUTOUTS
FRONT SPAR

SECTION B-B
6 IN. = 1 FT.

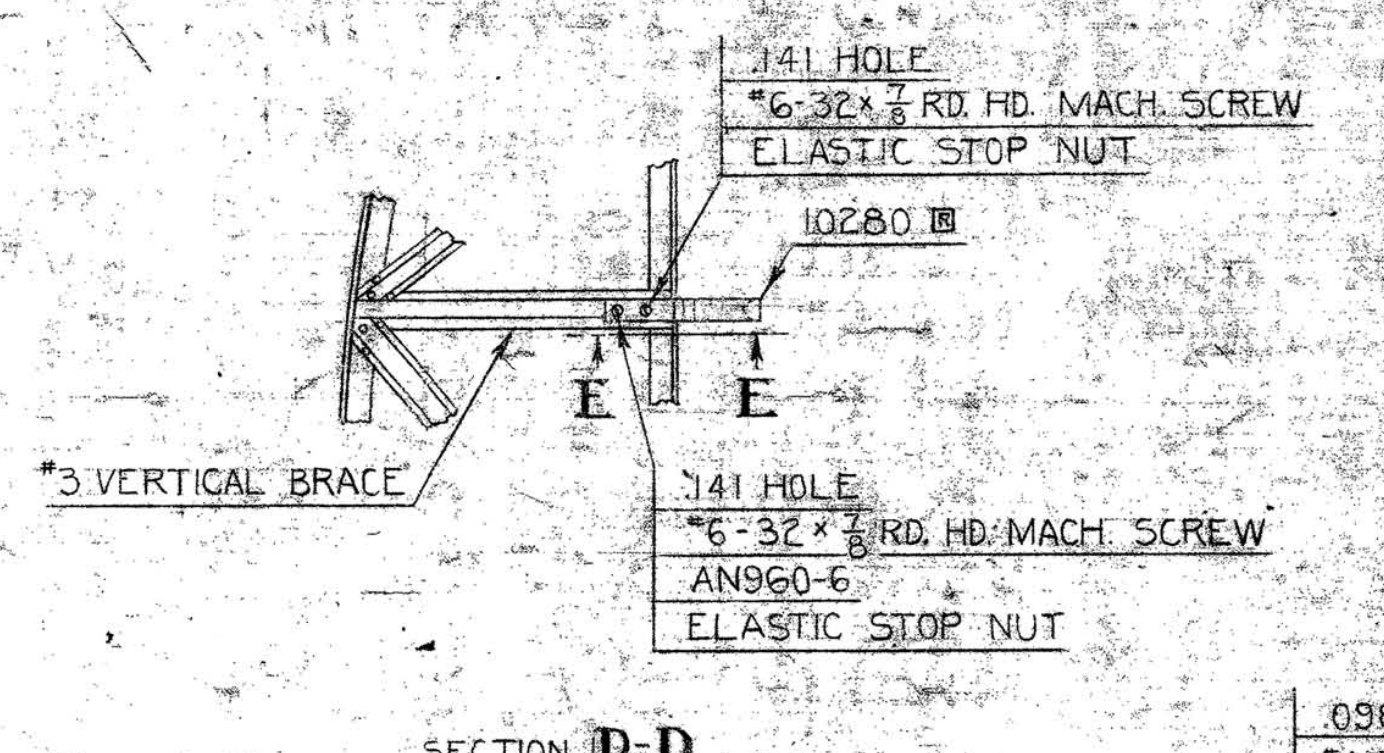
.141 HOLE #6-32 x 7/8 RD. HD. MACH. SCREW ELASTIC STOP NUT
10280
E
E
#3 VERTICAL BRACE
.141 HOLE #6-32 x 7/8 RD. HD. MACH. SCREW AN960-6 ELASTIC STOP NUT

SECTION D-D

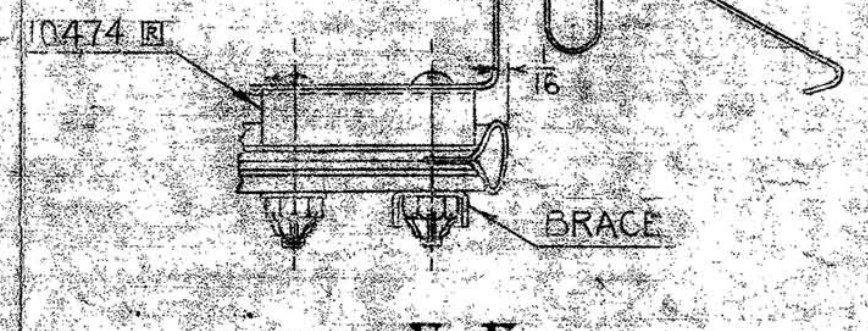
10474
BRACE

SECTION E-E
FULL SIZE

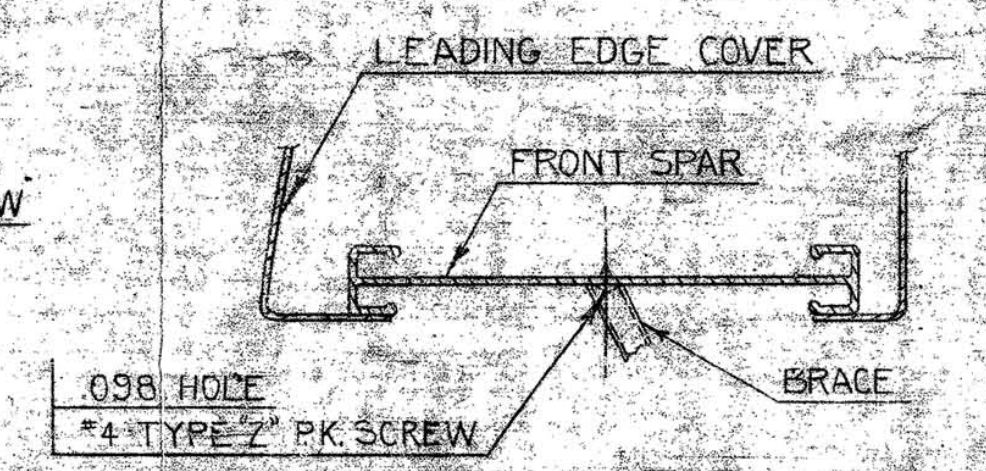
LEADING EDGE COVER
FRONT SPAR
BRACE
.098 HOLE #4 TYPE "Z" PK. SCREW

SECTION F-F
6 IN. = 1 FT.

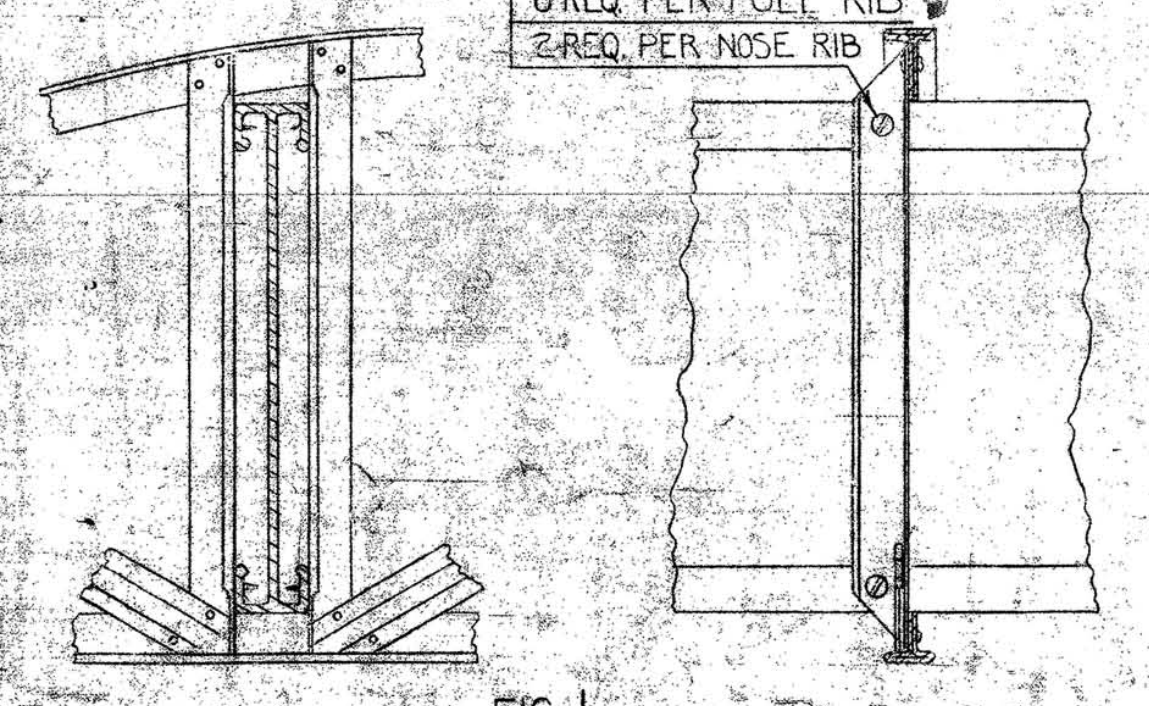
#4 TYPE "Z" PK. SCR. 8 REQ. PER FULL RIB 2 REQ. PER NOSE RIB

FIG. 1
TYPICAL RIB TO SPAR ATTACH.
6 IN. = 1 FT.

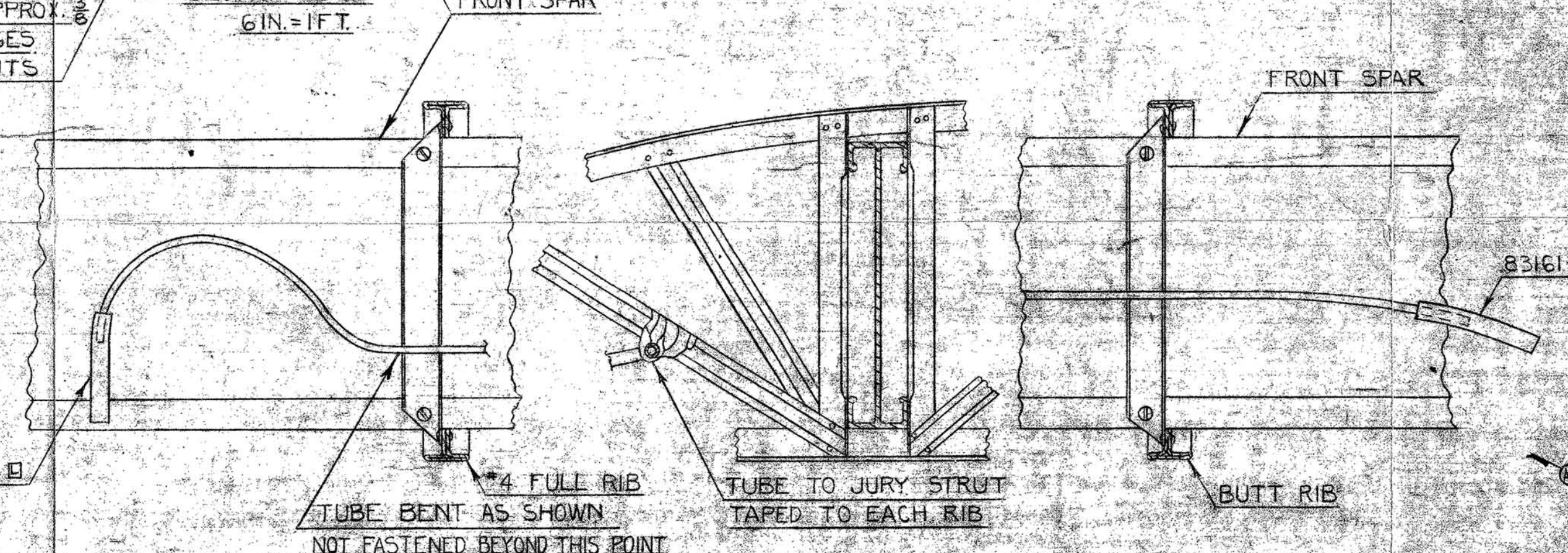
FRONT SPAR
FRONT SPAR
83161-2
83161-2
TUBE BENT AS SHOWN NOT FASTENED BEYOND THIS POINT
#4 FULL RIB
TUBE TO JURY STRUT TAPED TO EACH RIB
BUTT RIB

FIG. 2
AIRSPEED TUBING INSTALLATION
6 IN. = 1 FT.

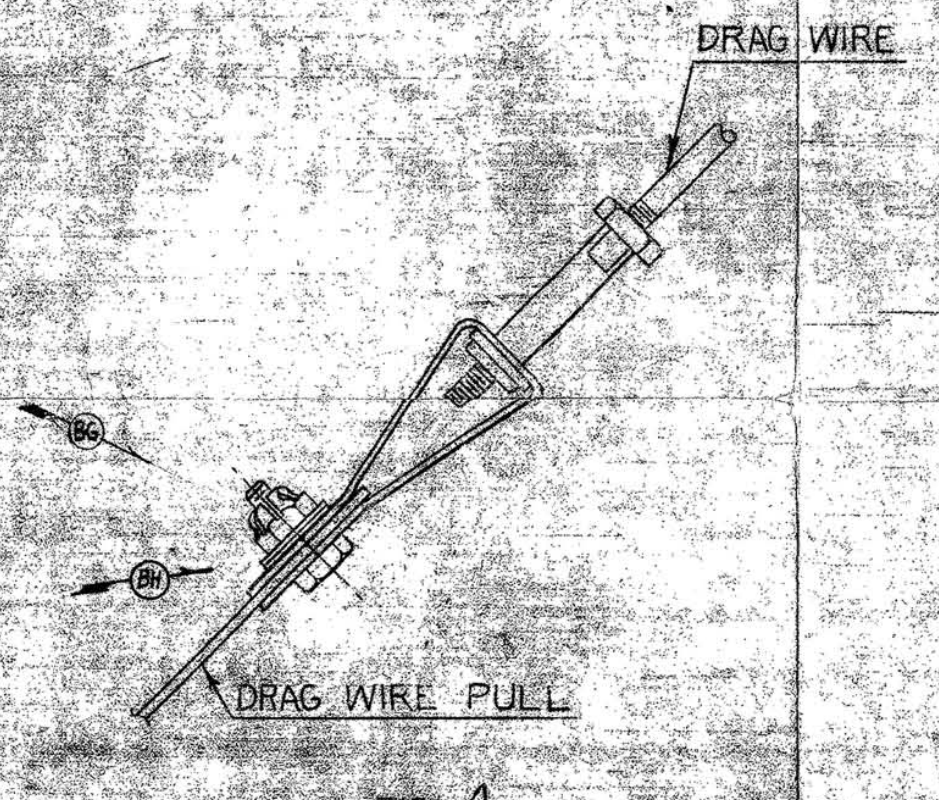
DRAG WIRE
DRAG WIRE PULL

FIG. 4
DRAG WIRE INST.
FULL SIZE

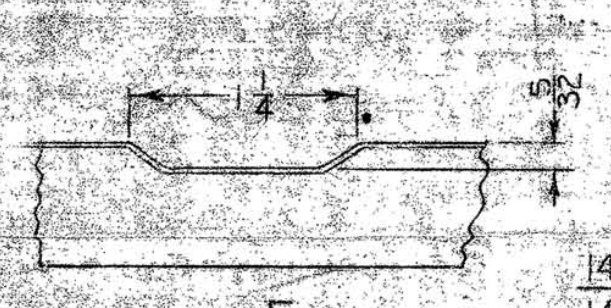

FIG. 5
TYPICAL FORMING OF RIB BRACES FOR DRAG WIRES
FULL SIZE

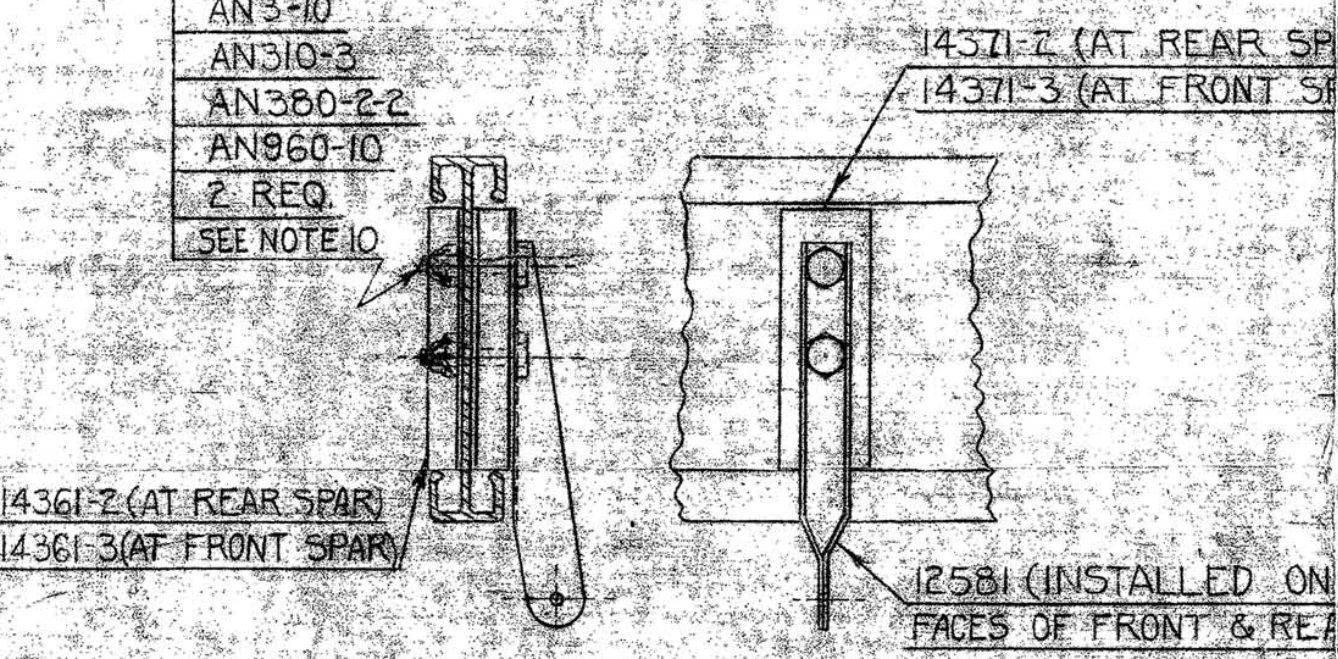
AN3-10
AN310-3
AN380-2-2
AN960-10
2 REQ.
SEE NOTE 10
14371-2 (AT REAR SPAR) 14371-3 (AT FRONT SPAR)
14361-2 (AT REAR SPAR) 14361-3 (AT FRONT SPAR)
12581 (INSTALLED ON INSIDE FACES OF FRONT & REAR SPARS)

FIG. 6
JURY STRUT FITTING INST.
6 IN. = 1 FT.

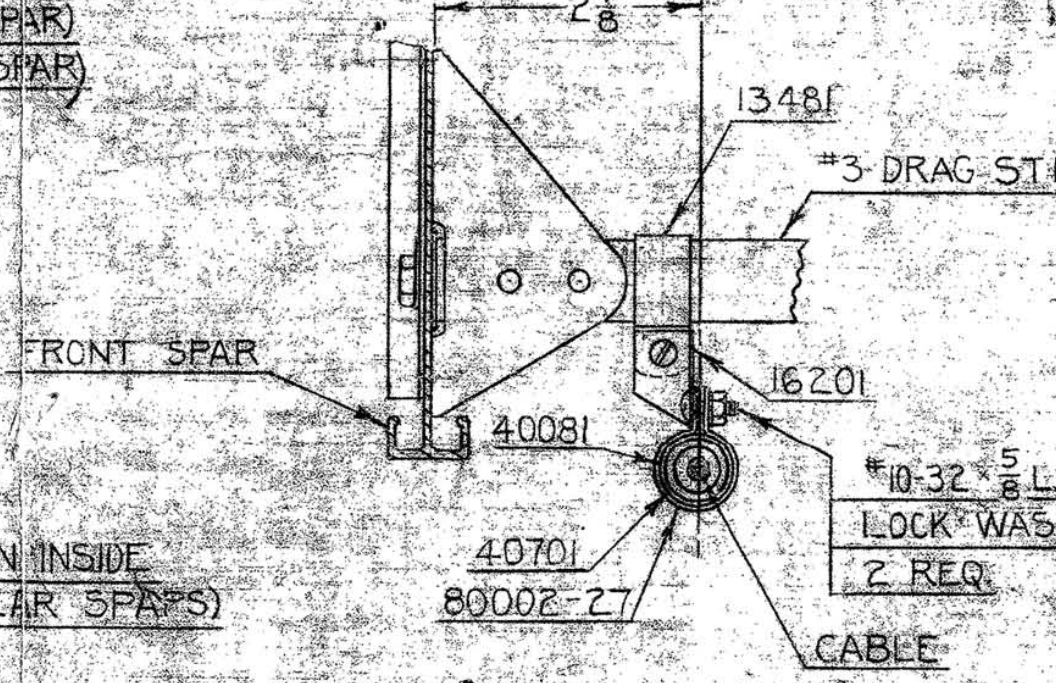
2 3/4
13481
#3 DRAG STRUT
FRONT SPAR
40081
16201
40701
80002-27
#10-32 x 5/8 L. RD. HD. MACH. SCR. LOCK WASHER & NUT 2 REQ.
CABLE

FIG. 7
#3 DRAG STRUT CABLE GUIDE INST.
6 IN. = 1 FT.

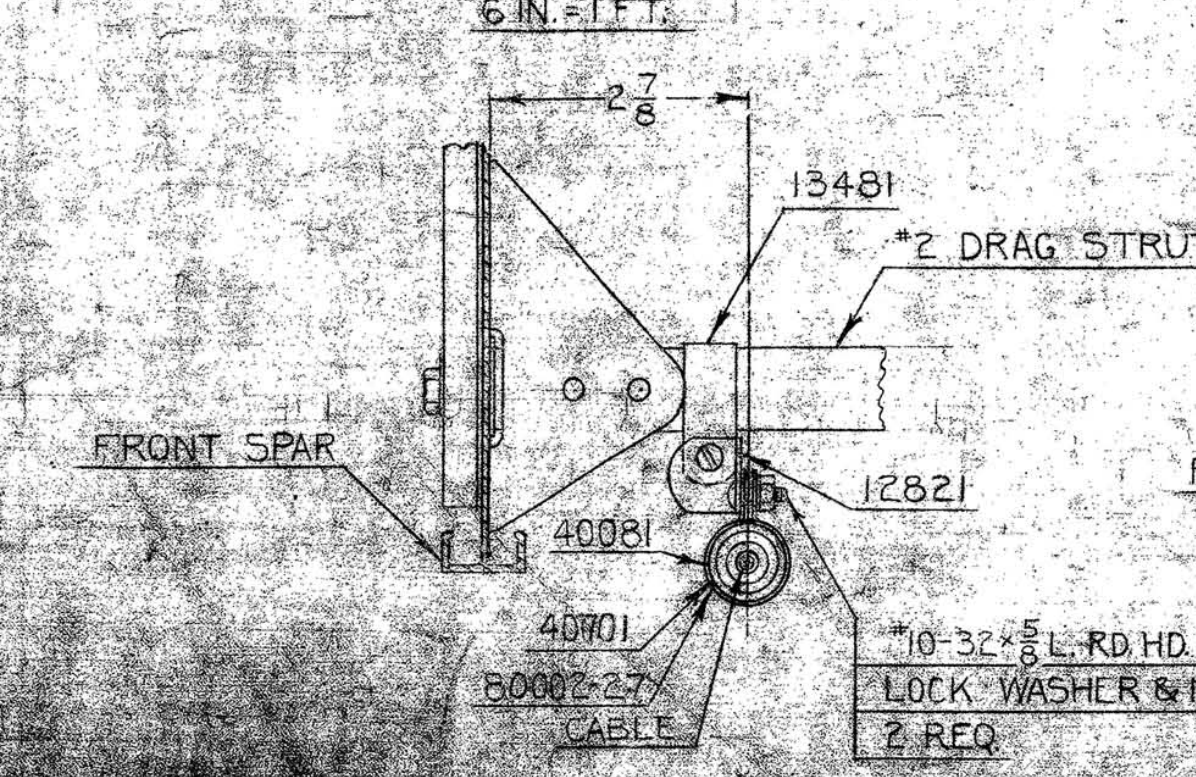
2 7/8
13481
#2 DRAG STRUT
FRONT SPAR
12821
40081
80002-27
CABLE
#10-32 x 5/8 L. RD. HD. MACH. SCR. LOCK WASHER & NUT 2 REQ.

FIG. 8
BUTT CABLE GUIDE INST.
6 IN. = 1 FT.

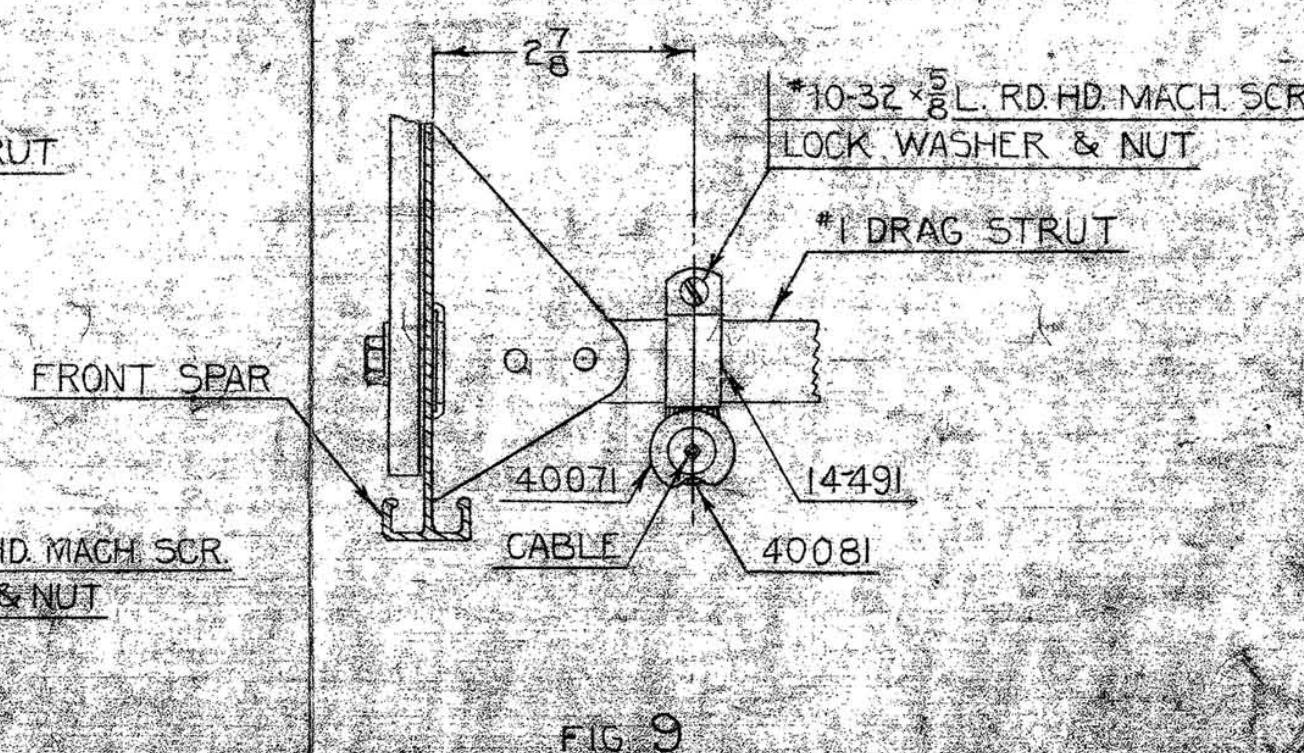
2 3/4
#10-32 x 5/8 L. RD. HD. MACH. SCR. LOCK WASHER & NUT
#1 DRAG STRUT
FRONT SPAR
14081
CABLE
40081
14191

FIG. 9
#1 DRAG STRUT CABLE GUIDE INST.
6 IN. = 1 FT.

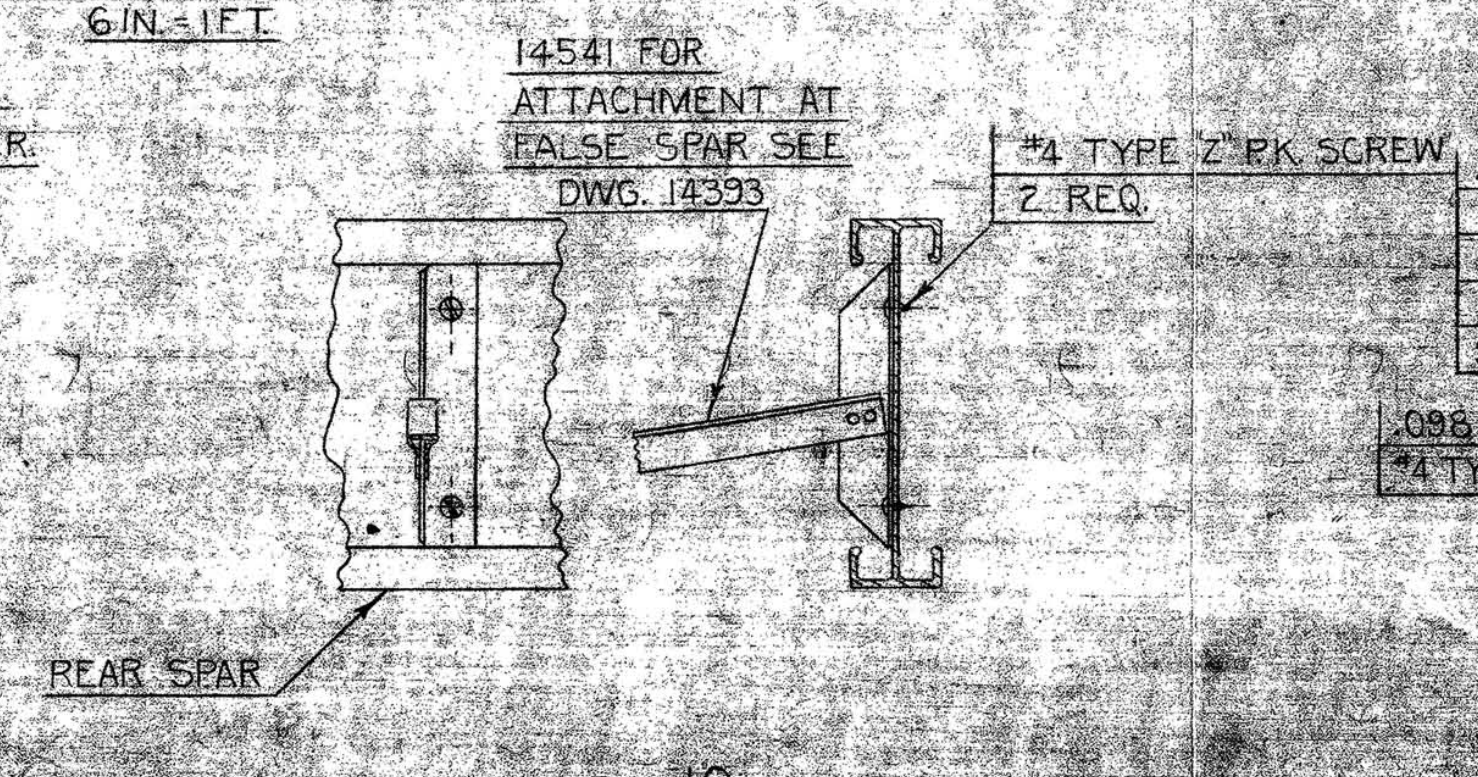
14541 FOR ATTACHMENT AT FALSE SPAR SEE DWG. 14393
#4 TYPE "Z" PK. SCREW 2 REQ.
REAR SPAR

FIG. 10
AILERON FALSE SPAR BRACE INST.
6 IN. = 1 FT.

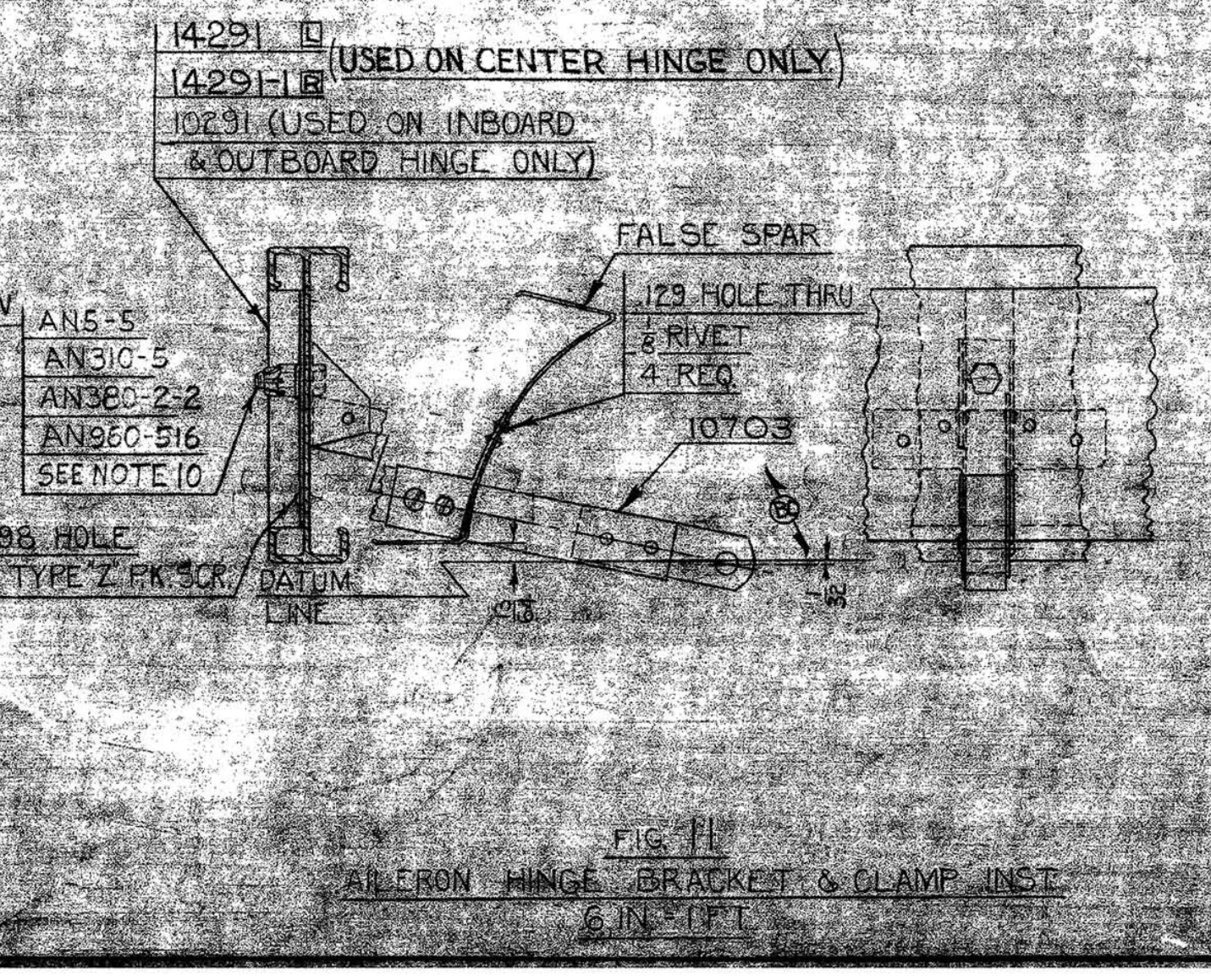
14291 14291-1 USED ON CENTER HINGE ONLY
10291 USED ON INBOARD & OUTBOARD HINGE ONLY
AN5-5
AN310-5
AN380-2-2
AN960-516
SEE NOTE 10
FALSE SPAR
.173 HOLE THRU 3 RIVETS
10703
.098 HOLE #4 TYPE "Z" PK. SCR.

FIG. 11
AILERON HINGE BRACKET & CLAMP INST.
6 IN. = 1 FT.

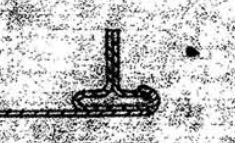

SECTION J-J
FULL SIZE

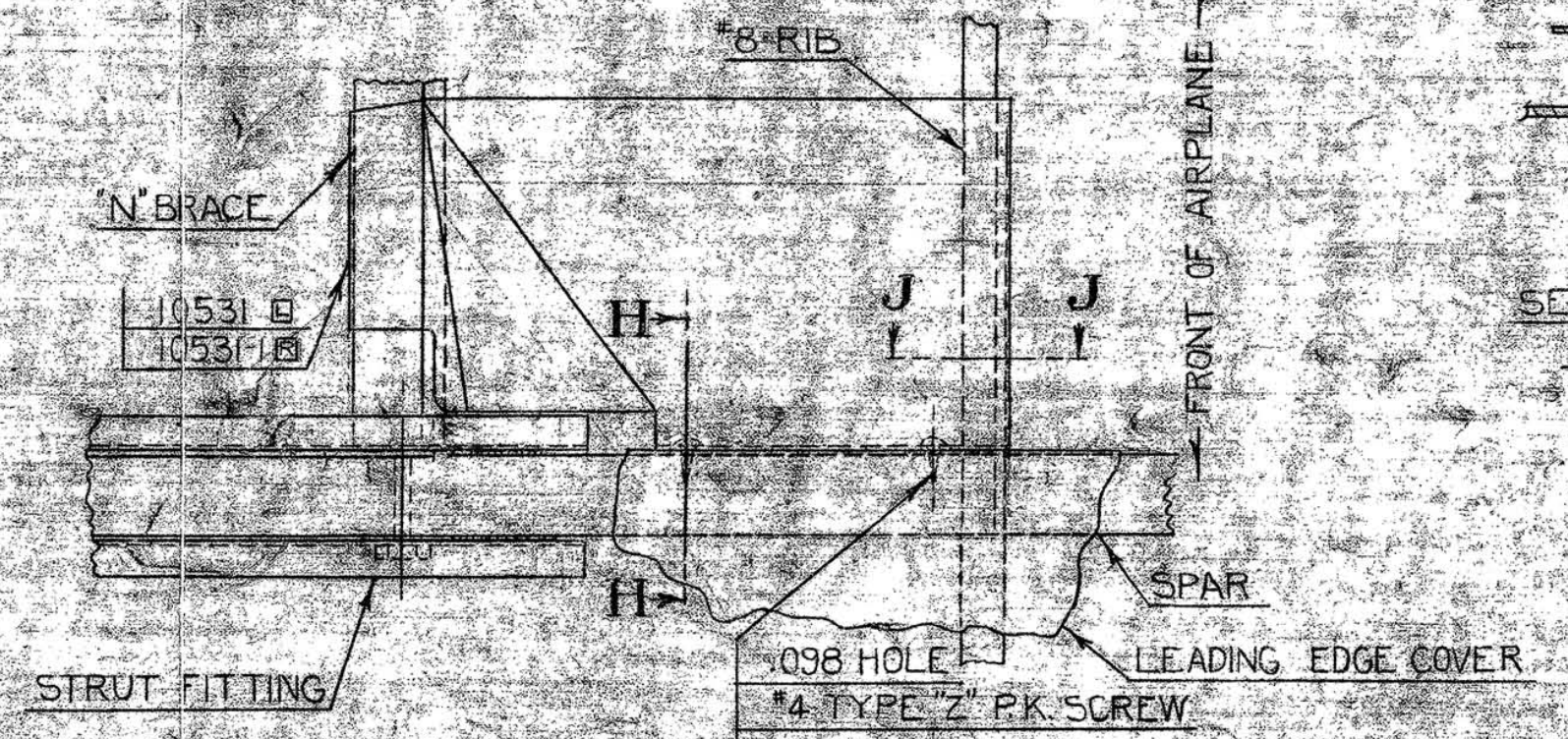
#8 RIB
"N" BRACE
10531 10531-1
H
H
J
J
FRONT OF AIRPLANE
STRUT FITTING
SPAR
.098 HOLE #4 TYPE "Z" PK. SCREW 2 REQ.
LEADING EDGE COVER

FIG. 13
FABRIC FORMER INST.
(BOTTOM VIEW)

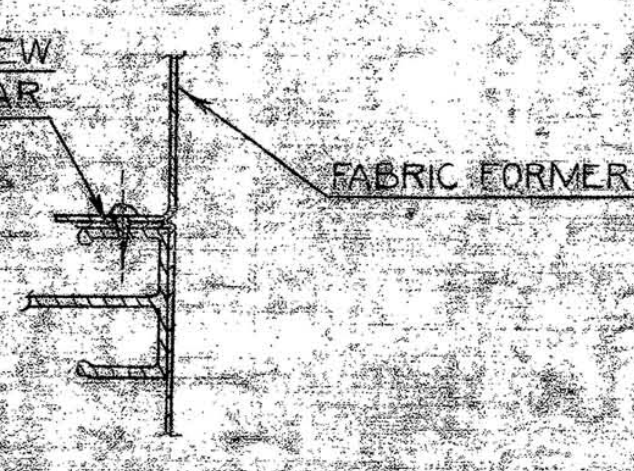
BOTTOM VIEW
FRONT SPAR
FABRIC FORMER

SECTION H-H
FULL SIZE

NOTES:
1. USE #3 WOOD SCREW WHERE FASTENING BRACES (DWG. NO. 12252) TO WOOD, #4-40 x 1/2 L. RD. HD. MACH. SCREW, LOCK WASHER & NUT WHERE FASTENING BRACES TO RIBS & #4 PK. SCREW TYPE "Z" WHERE FASTENING TO SPARS UNLESS OTHERWISE NOTED.
2. WING BUTT FITTINGS MUST FIT RELATED PARTS ON FUSELAGE FRAME DRAWING.
3. CENTER LINE OF AILERON HINGE BRACKET BEARINGS MUST COINCIDE WITHIN .010.
4. AILERON HINGE BRACKET CENTER LINES MUST COINCIDE WITH THOSE OF AILERON HINGES. (SEE AILERON ASSEMBLY DRAWING)
5. SEE FIG. 5 FOR TYPICAL FORMING OF RIB BRACE TO CLEAR DRAG WIRE.
6. WHERE SEE NOTE 6 IS INDICATED — PARKER SCREWS ARE INSTALLED IN ALL RIBS INBOARD OF THE STRUT ATTACHMENT POINT.
7. FOR RIB REPAIRS SEE DRAWING 16643.
8. CENTER LINE OF DRAG BRACING OF FRONT AND REAR SPARS SHALL BE COINCIDENT.
9. PARTS MARKED L USED ON LEFT ASS'Y ONLY.
PARTS MARKED R USED ON RIGHT ASS'Y ONLY.
10. WHERE "SEE NOTE 10" IS INDICATED, ELASTIC STOP NUTS (TYPE 22M OR 42E) MAY BE USED.

OCT 1 1 1967

15556 L.H. SHOWN
15556-1 R.H. OPPOSITE

"This drawing is the property of the Piper Aircraft Corp. and its possession by unauthorized persons shall not be construed as permission to reproduce for sale, in whole or in part, any devices shown thereon."

PART NO.	NO. REQ.	SIZE	MATERIAL
10531-1 10531	1		FABRIC FORMER
	1 L	3/4 x 200 L.	FRICTION TAPE
	1 R	3/4 x 130 L.	
	2	3/4 L.	#18 GA. WIRE BRAD
	12	1/8 x 1/4 L.	BR. HD. SOFT ALUM. RIVET
#4	223	1/4 L.	TYPE "Z" RD. HD. PK. SCREW
#4	98	1/4 L.	TYPE "A" STOVE HD. PK. SCREW
#3	3	1/2 L.	RD. HD. STEEL CD. PLATED WOOD SCREW
#10	5		SPRING STL. CD. PLATED LOCK WASHE
#10-32	5		#1010 STL. CD. PLATED HEX. NUT
#10-32	5	5/8 L.	#1010 STL. CD. PLATED RD. HD. MACH. SCREW
	2		ELASTIC STOP NUT "22M6
#6-32	2	7/8 L.	#1010 STL. CD. PLATED RD. HD. MACH. SCREW
#4	13		SPRING STL. CD. PLATED LOCK WASHER
#4-40	13		#1010 STL. CD. PLATED HEX. NUT
#4-40	13	1/2 L.	#1010 STL. CD. PLATED RD. HD. MACH. SCREW
AN960-516	3		WASHER
AN960-10	4		
AN960-6	1		
AN380-2-2	7		COTTER PIN
AN310-5	3		NUT
AN310-3	4		
AN5-5	3		BOLT
AN3-10	4		
83161-2	2 L		HOSE
16192-1 OR 10754-2 [illegible] OR 10754	1		WINGTIP NOSE RIB
80122-5	3		WASHER
80002-27	2		CLAMP
40701	4		FAIRLEAD SEGMENT
40123-3	1		CABLE
40081	3		SNAP RING
40071	2		FAIRLEAD SEGMENT
16643	–		RIB REPAIRS
15403-1 15403	1		BRACE ASSY.
16201	1		ANGLE
10755-2 OR 15712	1		WING NOSE RIB
15773	1		TRAILING EDGE
15742	1		WING LEADING EDGE COVER
15723-1 15723	1		TIP LEADING EDGE COVER
15572-1 15572	1		FALSE SPAR (OUTBOARD)
15562-1 15562	1		FALSE SPAR (INBOARD)
15482-1 15482	1		LEADING EDGE CENTER COVER
15472-1 15472	1		LEADING EDGE INBOARD COVER
14941-7	2		DRAG WIRES
14941-6	6		
14541	6		BRACE ASSY.
14453-3 14453-2	1		REAR SPAR
14491	1		CLAMP ASSY.
14433	1		LIFT STRUT FITTING INST.
14393	1		FALSE SPAR INST.
14383-3 14383-2	1		FRONT SPAR
14371-3	1		FILLER BLOCK
14371-2	1		
14361-3	1		ATTACHMENT ANGLE
14361-2	1		
14351	1		RIB NOSE TAPE INST.
14323	1		TIP BOW INST.
14312	1		DRAG STRUT INST.
14302	1		BUTT FITTING INST.
14283	1		LIFT STRUT FITTING INST.
14252	2		DRAG STRUT INST.
14242	1		
14232	1		DRAG STRUT
14222-2	2		
14222	1		
14202	1		BUTT FITTING INST.
13541-2	1 L		AIRSPEED TUBING
13481	2		CLAMP
13072-5	1		WING LEADING EDGE COVER
13052-4	1		FULL RIB
13052-2	3		
13042-1 13042	1		INBOARD AILERON RIB
13022-6	1		THREE-QUARTER RIB
13022-5	1		
13022-2	4		
14291-1 14291	1		ANGLE PLATE
12902-1 12902	1		OUTBOARD AILERON RIB
12821	1		ANGLE
12581	2		FITTING
12451	1		CENTER TAPE INST.
12422			TRAILING EDGE INST.
12331	1		WING BUTT RIB LEADING EDGE ATTA
12252-8	2		CHANNEL BRACES
12252-5	1		
12252-4	38 26		
12252-3	7		
12252-2	6		
12662-2 OR 10755	10		WING NOSE RIB
10703	3		BRACKET ASSY.
10742-3 10742-2	1		TIP RIB
10474	1 L		CHANNEL
10291	2		ANGLE
10280	1 R		DOOR CATCH
-3			SUB-ASSY. CONSISTS OF 1 EACH OF 40123-3, 12821 & 16201; 2 EACH OF 40081
-2			80002-27, #10-32 x 5/8 MACH. SCREW #10-32 NUT & #10 LOCK WASHER, 4 OF 40701.

SCALE 3 IN. = 1 FT. & NOTED — TOTAL WT.
FINISH — PIPER SPECIFICATION 310
MANUFACTURING PRACTICES — PIPER SPECIFICATION

LET.	REVISION	DATE	BY
BH	VIEW OF FIG. 4 REVISED	11-1-46	I.D.B.
BG	BOLTS REVERSED	8-30-46	L.R.
BF	#3 RD. HD. STEEL CD. PLATED WOOD SCREW WAS #3 WOOD SCREW	8-22-46	J.H.
BE	10754; 10754-2; 10755 & 10755-2 ADDED	8-12-46	I.D.B.
BD	NOTE 10 ADDED	6-19-46	C.E.K.
BC	10703 ADDED	6-13-46	B.S.

LET.	REVISION	DATE	BY
BB	10931-2, 10912-6 & ATTACH. REM.	6-13-46	BC
BA	10212, 8102-3 & ATTACH. REM.	6-13-46	BC
AZ	10101, 13401 & 13431 REM.	6-13-46	BC
AY	-2 & -3 SUB-ASSY. ADDED	6-13-46	BC
AX	15403 & 15403-1 ADDED	6-13-46	BC
AW	10112-1, 16462, 16472 & ATTACH. REM.	6-13-46	BC
AV	14291, 14291-1 & ATTACH. ADD.	6-13-46	BC
AU	1101, 8055 & ATTACH. REM.	5-22-46	C.E.Y.
AT	NAVIGATION LIGHT WIRE REM.	5-22-46	C.E.Y.
AS	REDRAWN & REVISED	4-9-46	F.I.N.

MODEL	PER PLANE	NEXT ASSEMBLY	SUPERSEDES	SUP. BY
J3	1 L, 1 R	16243	14445	

PIPER AIRCRAFT CORP.
LOCK HAVEN, PENNA.

PANEL ASSEM

DRAFTSMAN: E. L. N. 4-9-46

15556